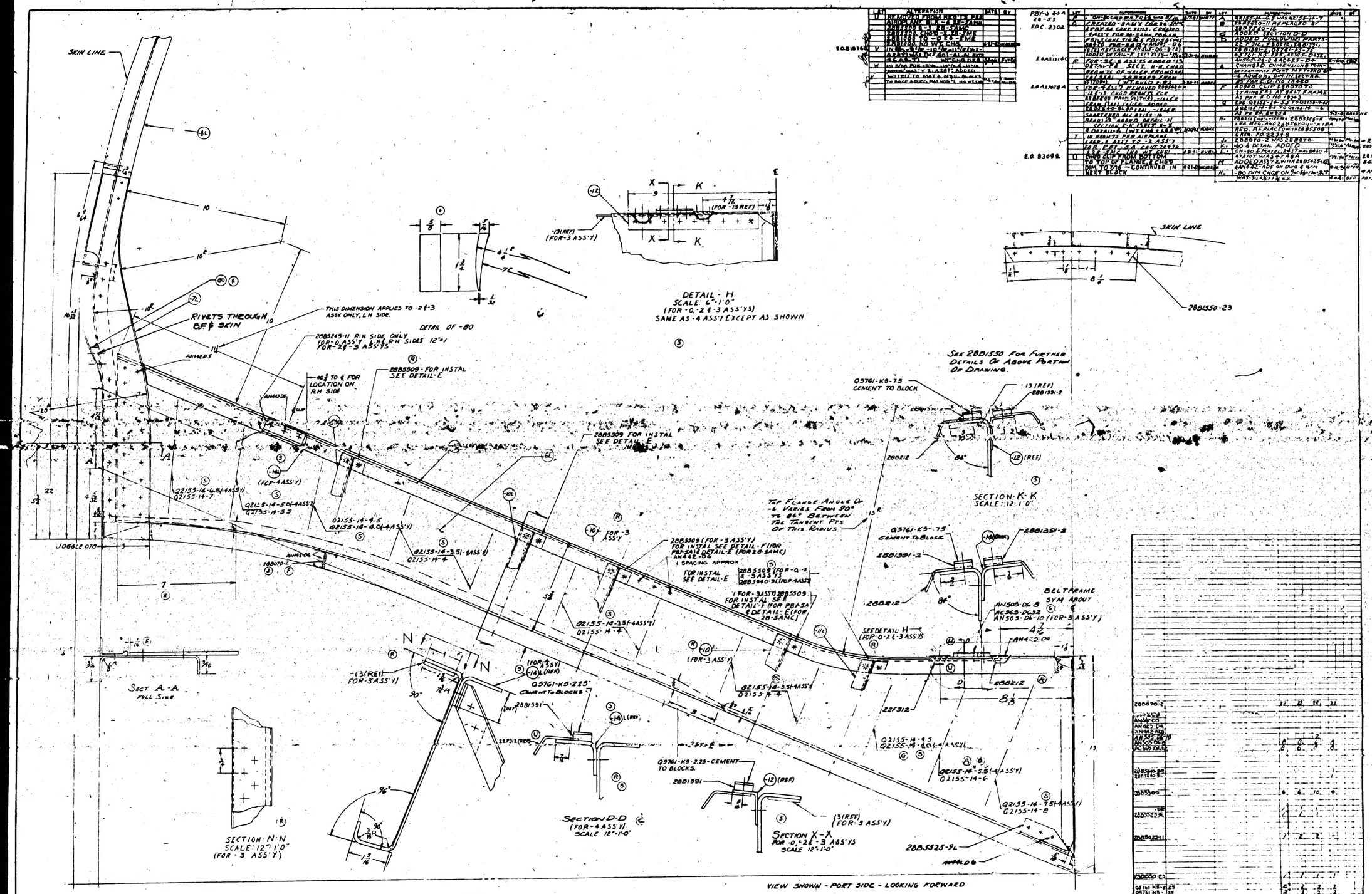

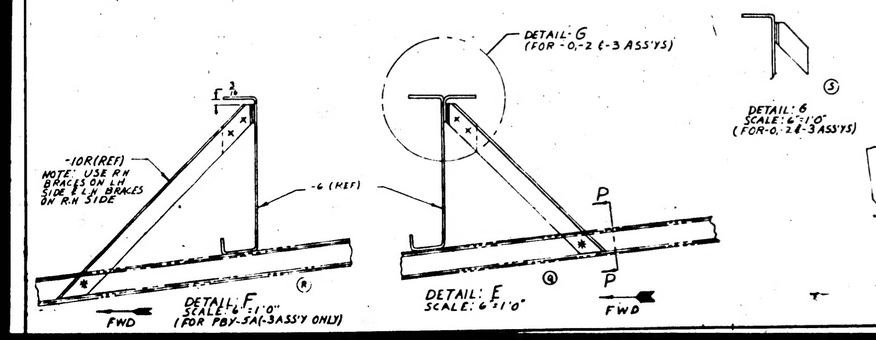

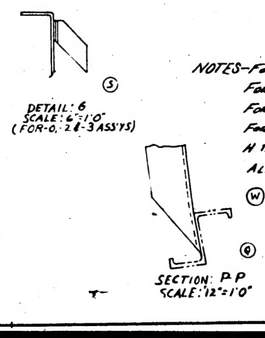

NOTES—FOR OUTSIDE CONTOUR SEE 28B003.
FOR CONTOUR BEVELS SEE 28B036.
FOR STRINGER LOCATIONS SEE 28B1007.
FOR DIMEN'S NOT SHOWN SEE 28B1550.
H.T. ALL GRADE A MAT. PER SPEC. SR-53.
ALL RIVETS AN442D. UNLESS OTHERWISE NOTED

(W) MATERIAL NOTES:
L - MAT'L. FOR -9 1/8, -10 1/8 & -11 1/8 MAY BE
(W) Y-Z 2 ART. OR
(W) K5401, AL. AL. TUBE, SPEC QQ A 354 T.

FINISH CODE	
A	ANODIC TREATMENT
P	P-27 PRIMER
AP	ALUMINUM O PRIMER
C	CHROMIC PLATE

-0	28-5MN	28B1060	1
-2	28-5ME	28B1060	1
-0	28-5MG	28B1060	1
-2	28-5MA	28B1060	1
-4	PBY-5A	28B5300	1
-3	PBY-5A	28B5300	1
-2	PBY-5A	28B5300	1
-4	PBY-5A	28B5300	1
-4	PBY-5A	28B5300	1
-0	PBY-5	28B1060	1
-4	PBY-5	28B1060	1

REQUIREMENTS PER AIRPLANE

DRAWN BY	CHK BY
1/32	6"=1'0"

STAMP PART NUMBER WHERE SHOWN

28B070-2			32	32	32
AN425					
AN425-D4					
AN442-D4					
AN503-D6-10					
AN503-D6-8					
AC565-D632					
28B5509-80					
28B1550-8L					
28B5509			4	4	10
28B5525-9L					
28B5423-11			1	2	2
28B5550-23			1	1	1
Q5761-K8-.75			6	2	2
Q5761-K5-.75			2	2	2
28B1391			4	4	4
28B1391-2			4	4	4
22F312			4	4	4
28B5423-14R			1	1	1
-14			1	1	1
-80	1/8	1/8	ALCLAD	61AD T	2
-12	064	1/8	ALCLAD	61AD T	2
-11R	NOTED	1/8	NOTED	NOTED	1
-11L		1/8			1
-10R		1/8			1
-10L		1/8			1
-8R		.10			1
-8L	NOTED	.10	NOTED	NOTED	1
-9R	1/8	.08	ALCLAD	61AD T	1
-9L	1/8	.08	ALCLAD	61AD T	1
-12	064	.63	ALCLAD	61AD T	1
-6R	091	.14	ALCLAD	61AD A	1
-6L	091	.14	ALCLAD	61AD A	1
28B5550					

PARTS LIST FOR ASSY

| | | | | |